Perfecto installation kit -

12 614 970 90 Product version from 10/23/2019

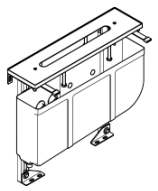

- height adjustable
- 1/2" connection
- retaining screws and plugs
- 2x 1/2" x 1/2" x 600mm high pressure hose
- brass washers
- assembly kit with installation plate
- spacer posts
- installation plate 566 x 144 mm
- angle valves, variable in height and laterally

for deck-mounted tub/shower sets for tile mounting

Perfecto installation kit -

12 614 970 90 Product version from 10/23/2019

mm [inches]

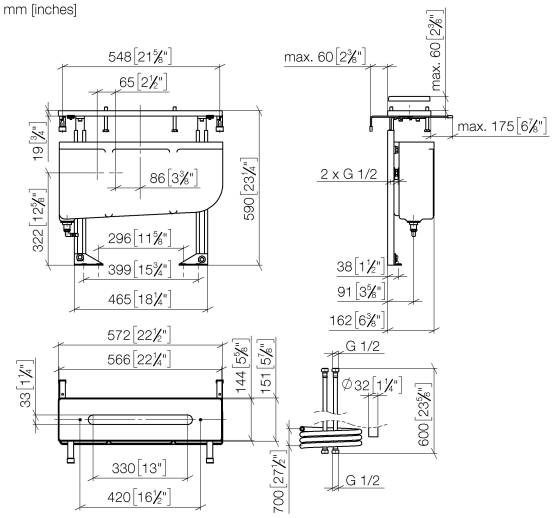

Perfecto installation kit -

12 614 970 90 Product version from 10/23/2019

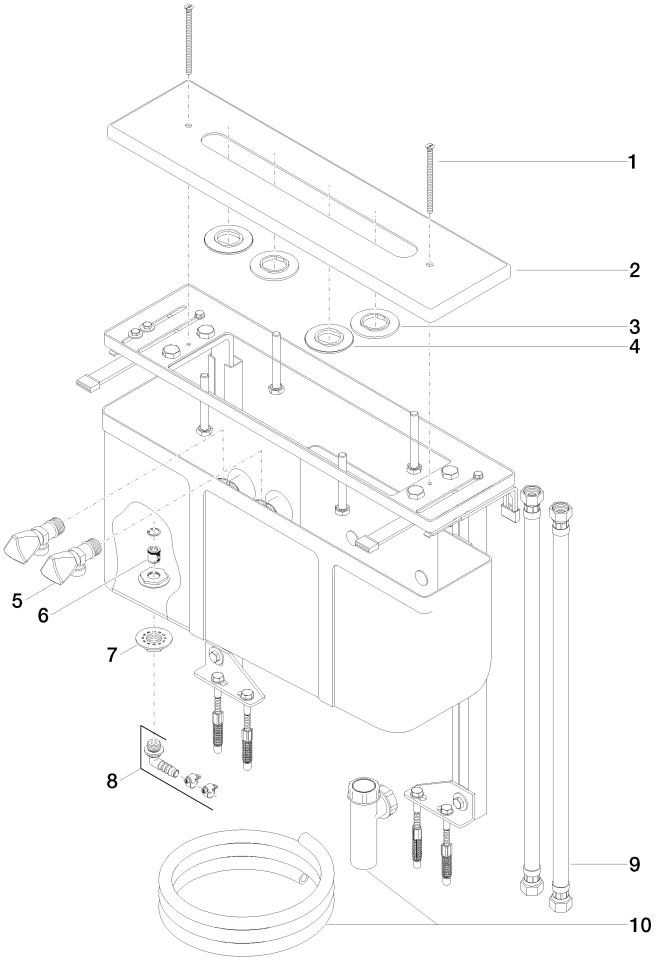

Spare parts list

No.	Item Number	Name	Quantity used	Delivery time
1	09 30 30 005 90	screw	2	2
2	09 28 01 005 90	plate	1	2
3	09 30 11 155 90	disc	2	2
4	09 30 11 014 90	disc	2	2
5	04 17 02 004 00 90	valve	2	2
6	09 23 01 160 90	back-flow preventer	1	2
7	09 23 10 010 90	nut	1	2
8	90 17 20 900 00 90	angle	1	60
9	12 503 970 90	High pressure hose 1/2" x 1/2" x 600 mm -	1	2
10	90 30 03 106 01 90	accessories	1	2

We reserve the right to change designs, product range and technical specifications without prior notice.
More information can be found at: www.dornbracht.com +49 (0) 2371 8899 900 mail@dornbracht.com